MTH320 2024S1 Exam

Feel free to contact me at maths_and_programming@outlook.sg if you need tuition. I provide university level tuition for the following SUSS units:

* ENG201 Linear Systems Analysis and Design
* ENG301 Microprocessor Programming
* ICT101 Computational Thinking
* ICT133 Structured Programming
* ICT162 Object Oriented Programming
* MTD215 Application of C++ in Multimedia
* ICT231 Data Structures and Algorithms I
* ICT232 Data Structures and Algorithms II
* MTH105 Fundamentals of Mathematics
* MTH107 Calculus I
* MTH108 Calculus II
* MTH316 Multivariable Calculus
* MTH319 Mathematical Methods I
* MTH320 Mathematical Methods II
* MTH207 Linear Algebra
* MTH219 Fundamentals of Statistics and Probability
* MTH220 Statistical Methods and Inference
* MTH355 Basic Mathematical Optimisation

Donaldson Tan

SINGAPORE UNIVERSITY OF SOCIAL SCIENCES

MTH320

Examination - January Semester 2024

Mathematical Methods II

Friday, 26 April 2024 **04:00 pm - 06:00 pm**

Time allowed: 2 hours

INSTRUCTIONS TO STUDENTS:

1. This examination contains **FOUR (4)** questions and comprises **FOUR (4)** printed pages (including cover page).

2. You must answer **ALL** questions.

3. All answers must be written in the answer book. Marks will only be awarded if FULL working is shown.

4. This is an **Open-book** examination.

At the end of the examination.
Please ensure that you have written your examination number on each answer book used.

Failure to do so will mean that your work cannot be identified.
If you have used more than one answer book, please tie them together with the string provided.

THE UNIVERSITY RESERVES THE RIGHT NOT TO MARK YOUR SCRIPT IF YOU FAIL TO FOLLOW THESE INSTRUCTIONS.

MTH320 Copyright © 2024 Singapore University of Social Sciences (SUSS)

(Full marks: 100)

Question 1

Given an RLC series circuit with $L = 2H, R = 8\Omega, C = 1/26F$ and voltage source $E(t) = 520V$. The initial charge on the capacitor is zero and the initial current is $16A$. The current across a capacitor is given by : $I_c = C\dfrac{dV_c}{dt}$.

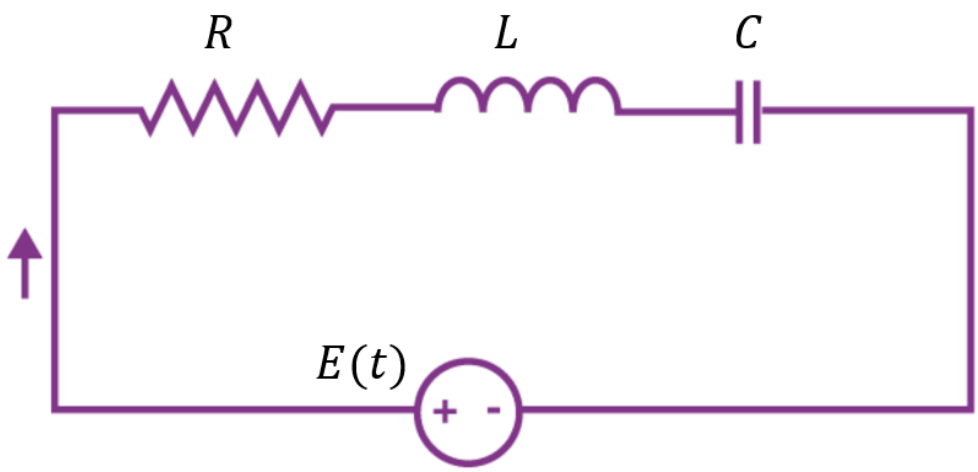

Figure 1: RLC series circuit

Question 1a

Using Kirchhoff laws, show that the differential equation governing the charge $q(t)$ on the capacitor is:

$$\frac{d^2q}{dt^2} + 4\frac{dq}{dt} + 13 = 260.$$

Hint: $i(t)$ is the rate of change of $q(t)$ with respect to time.

(8 marks)

Question 1b

Find $q(t)$.

(15 marks)

Question 1c

What happens to the charge on the capacitor over time?

(2 marks)

Question 2

A string of length L is tautly fixed at its ends and is lifted at the position as shown in the figure below:

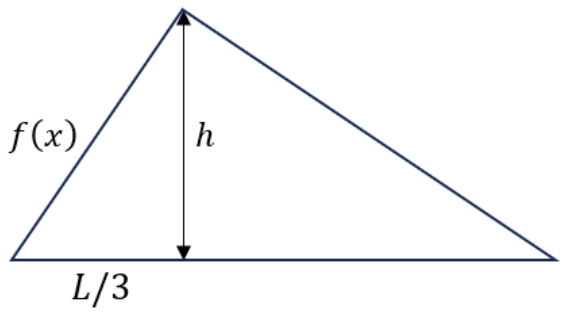

<u>Figure 2: String with fixed ends</u>

Question 2a

Show that the initial displacement has the piecewise function:

$$f(x) = \begin{cases} \frac{3hx}{L}; 0 \leq x \leq L/3 \\ \frac{3h}{2}\left(1 - \frac{x}{L}\right); L/3 < x \leq L \end{cases}$$

(9 marks)

Question 2b

Derive the wave equation for a 3-meter long string. Given that $h = 0.2m, c = 1m/s$ and the initial velocity is zero.

(4 marks)

Question 2c

Solve the above system for $u(x,t)$.

(15 marks)

Question 2d

Explain what happens to the string vibration as $t \to \infty$?

(2 marks)

Question 3a

Prove that the collection $\{1, \cos x, \sin x, \cos 2x, \sin 2x, \cos 3x, \sin 3x, \ldots\}$is orthogonal on $[-\pi, \pi]$.

(10 marks)

Question 3b

A 2-meter long steel rod is insulated with initial temperature distribution given by $f(x) = 10x$. Given that steel has thermal diffusivity of $\alpha = 18mm^2/s$. Define and solve the one-dimensional head conduction problem along rod's length.

(15 marks)

Question 4

A damped mass-spring system has the following equation of displacement:

$$y'' + 4y' + 3y = \delta(t-3); y(0) = 0; y'(0) = 0.$$

Question 4a

Plot $\delta(t-3)$ and explain its impact on the system. Determine the particular solution of this system using Laplace transform.

(15 marks)

Question 4b

Is the system under damped, critically damped or over damped? Explain the displacement of the spring.

(5 marks)

----- END OF PAPER -----

1 (a) $I_c = C\dfrac{dV_c}{dt}$

$\dfrac{dV_c}{dt} = \dfrac{1}{C} I_c = \dfrac{1}{C}\dfrac{dq}{dt}$

$V_c = \int \dfrac{1}{C}\dfrac{dq}{dt}\,dt = \dfrac{q}{C} = 26q$

Applying Kirchoff's Law,

$E(t) - IR - I'L - V_c = 0$

$IR + I'L + V_c = E(t)$

$8\dfrac{dq}{dt} + 2\dfrac{d^2q}{dt^2} + 26q = 520$

$\therefore \dfrac{d^2q}{dt^2} + 4\dfrac{dq}{dt} + 13q = 260$

(b) $L\left\{\dfrac{d^2q}{dt^2} + 4\dfrac{dq}{dt} + 13q\right\} = L\{260\}$

$q(0) = 0, \quad q'(0) = 16$

$(s^2 Q(s) - 16) + 4s\,Q(s) + 13\,Q(s) = \dfrac{260}{s}$

$(s^2 + 4s + 13)\,Q(s) = \dfrac{260}{s}$

$Q(s) = \dfrac{260}{s(s^2+4s+13)}$

$= 20\left[\dfrac{1}{s} - \dfrac{s+4}{s^2+4s+13}\right]$

$= 20\left[\dfrac{1}{s} - \dfrac{(s+2)+2}{(s+2)^2+3^2}\right]$

$= 20\left[\dfrac{1}{s} - \left[\dfrac{s+2}{s^2+3^2}\right]_{s\to s+2}\right]$

$= 20\left[\dfrac{1}{s} - \left[\dfrac{s}{s^2+3^2} + \dfrac{2}{3}\cdot\dfrac{3}{s^2+3^2}\right]_{s\to s+2}\right]$

$\therefore q(t) = L^{-1}\{Q(s)\}$

$= 20\left[1 - e^{-2t}\left[\cos(3t) + \dfrac{2}{3}\sin(3t)\right]\right]$

$= 20 - 20e^{-2t}\left[\cos(3t) + \dfrac{2}{3}\sin(3t)\right]$

(c) As $t\to\infty$, $e^{-2t}\to 0$, $1 - e^{-2t}\to 1$, $q(t)\to 20$

The charge of the capacitor stagnates at 20 columbs

2(a)

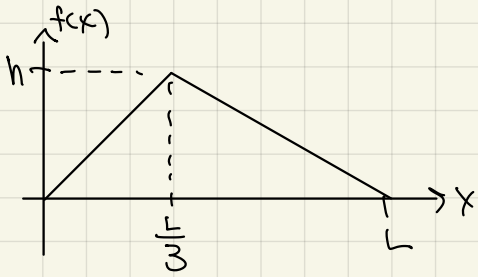

$$\frac{y-0}{x-0} = \frac{h-0}{\frac{L}{3}-0}$$

$$\frac{y}{x} = \frac{h}{\frac{L}{3}} = \frac{3h}{L}$$

$$y = \frac{3hx}{L}$$

$f(0) = f(L) = 0$

$f(\frac{L}{3}) = h$

$f(x) = \frac{3hx}{L}$ for $0 \le x \le \frac{L}{3}$

$$\frac{y-0}{x-L} = \frac{h-0}{\frac{L}{3}-L} = -\frac{h}{\frac{2}{3}L}$$

$$\frac{y}{x-L} = -\frac{3h}{2L}$$

$$y = -\frac{3h}{2L}(x-L) = \frac{3h}{2}\left(1-\frac{x}{L}\right)$$

$$\therefore f(x) = \begin{cases} \frac{3hx}{L} & \text{for } 0 \le x \le \frac{L}{3} \\ \frac{3h}{2}\left(1-\frac{x}{L}\right) & \text{for } \frac{L}{3} \le x \le L \end{cases}$$

(b) $h = 0.2,\ c = 1,\ L = 3$

$$f(x) = \begin{cases} 0.2x & \text{for } 0 \le x \le 1 \\ 0.3\left(1-\frac{x}{3}\right) & \text{for } 1 \le x \le 3 \end{cases}$$

$u_{xx} = u_{tt}$

$u(0,t) = 0,\ u(3,t) = 0,\quad t \ge 0$

$u(x,0) = f(x),\ u(x,0) = 0,\quad 0 \le x \le 3$

2(c)

$$u(x,t) = \sum_{n=1}^{\infty} \sin(\omega_n x)\left[a_n \cos(\omega_n c t) + b_n \sin(\omega_n c t)\right], \quad \omega_n = \frac{n\pi}{L} = \frac{n\pi}{3}$$

since initial velocity $=0$, $b_n = 0$

$$a_n = \frac{2}{L}\int_0^L f(x)\sin\left(\frac{n\pi x}{L}\right)dx$$

$$= \frac{2}{3}\int_0^3 f(x)\sin\left(\frac{n\pi x}{3}\right)dx$$

$$= \frac{2}{3}\int_0^1 0.2x\sin\left(\frac{n\pi x}{3}\right)dx + \frac{2}{3}\int_1^3 0.3\left(1-\frac{x}{3}\right)\sin\left(\frac{n\pi x}{3}\right)dx$$

$$= \frac{4}{15}\int_0^1 x\sin\left(\frac{n\pi x}{3}\right)dx + \frac{1}{5}\int_1^3 \left(1-\frac{x}{3}\right)\sin\left(\frac{n\pi x}{3}\right)dx$$

$$= \frac{4}{15}\int_0^1 x\sin\left(\frac{n\pi x}{3}\right)dx + \frac{1}{5}\int_1^3 \sin\left(\frac{n\pi x}{3}\right)dx - \frac{1}{15}\int_1^3 x\sin\left(\frac{n\pi x}{3}\right)dx$$

$$= \frac{4}{15}\left[-\frac{3x}{n\pi}\cos\left(\frac{n\pi x}{3}\right) + \int\frac{3}{n\pi}\cos\left(\frac{n\pi x}{3}\right)dx\right]_0^1 + \frac{1}{5}\left[-\frac{3}{n\pi}\cos\left(\frac{n\pi x}{3}\right)\right]_1^3 - \frac{1}{15}\left[-\frac{3x}{n\pi}\cos\left(\frac{n\pi x}{3}\right) + \int\frac{3}{n\pi}\cos\left(\frac{n\pi x}{3}\right)dx\right]_1^3$$

$$= \frac{4}{15}\left[-\frac{3x}{n\pi}\cos\left(\frac{n\pi x}{3}\right) + \frac{9}{n^2\pi^2}\sin\left(\frac{n\pi x}{3}\right)\right]_0^1 - \frac{1}{5}\left[\frac{3}{n\pi}\cos\left(\frac{n\pi x}{3}\right)\right]_1^3 - \frac{1}{15}\left[-\frac{3x}{n\pi}\cos\left(\frac{n\pi x}{3}\right) + \frac{9}{n^2\pi^2}\sin\left(\frac{n\pi x}{3}\right)\right]_1^3$$

$$= \frac{3}{n^2\pi^2}\sin\left(\frac{n\pi}{3}\right) - \frac{2}{5n\pi}\cos\left(\frac{n\pi}{3}\right)$$

$$\therefore u(x,t) = \sum_{n=1}^{\infty}\sin\left(\frac{n\pi x}{3}\right)\left[\left(\frac{3}{n^2\pi^2}\sin\left(\frac{n\pi}{3}\right) - \frac{2}{5n\pi}\cos(n\pi)\right]\cos\left(\frac{n\pi}{3}t\right)$$

(d) The boundary conditions of the string are enforced.

The string vibrates at mean deflection of $u(x) = 0$

because there is no dissipation of energy.

3(a) Consider the collection $\{1, \cos x, \sin x, \cos 2x, \sin 2x, \dots\}$

if $\int_{-\pi}^{\pi} \phi_m(x)\, \phi_n(x)\, dx = 0$ where: ϕ_i is the ith component of the collection
m, n are distinct indices

then the collection is orthogonal over $[-\pi, \pi]$

$\phi_m(x)\, \phi_n(x)$ takes the following forms:

$$\left.\begin{array}{l} (1)\ \cos(nx) \\ (2)\ \sin(nx) \\ (3)\ \cos(nx)\sin(nx) \\ (4)\ \cos(mx)\cos(nx) \\ (5)\ \sin(nx)\sin(mx) \end{array}\right\} \text{ } m, n \text{ are distinct positive integers}$$

Form (1):

$$\int_{-\pi}^{\pi} \phi_m(x)\, \phi_n(x)\, dx = \int_{-\pi}^{\pi} \cos(nx)\, dx = \left[\sin(nx)\right]_{-\pi}^{\pi} = \sin(n\pi) - \sin(-n\pi) = 0$$

Form (2):

$$\int_{-\pi}^{\pi} \phi_m(x)\, \phi_n(x)\, dx = \int_{-\pi}^{\pi} \sin(nx)\, dx = \left[-\cos(nx)\right]_{-\pi}^{\pi} = 0$$

Form (3):

$$\begin{aligned} \int_{-\pi}^{\pi} \phi_m(x)\, \phi_n(x)\, dx &= \int_{-\pi}^{\pi} \cos(nx)\sin(nx)\, dx \\ &= \frac{1}{2}\int_{-\pi}^{\pi} 2\cos(nx)\sin(2nx)\, dx \\ &= \frac{1}{2}\int_{-\pi}^{\pi} \sin(2nx)\, dx \\ &= \frac{1}{2}\left[-\cos(2nx)\right]_{-\pi}^{\pi} \\ &= 0 \end{aligned}$$

Form (4):

$$\begin{aligned} \int_{-\pi}^{\pi} \phi_m(x)\, \phi_n(x)\, dx &= \int_{-\pi}^{\pi} \cos(mx)\cos(nx)\, dx \\ &= \frac{1}{2}\int_{-\pi}^{\pi} \cos(m-n)x + \cos(m+n)x\, dx \\ &= \frac{1}{2}\left[\frac{1}{m-n}\sin(m-n)x + \frac{1}{m+n}\sin(m+n)x\right]_{-\pi}^{\pi} \\ &= 0 \end{aligned}$$

Form (5):

$$\begin{aligned} \int_{-\pi}^{\pi} \sin(mx)\sin(nx)\, dx &= \frac{1}{2}\int_{-\pi}^{\pi} \cos(m-n)x - \cos(m+n)x\, dx \\ &= \frac{1}{2}\left[\frac{\sin(m-n)x}{m-n} - \frac{\sin(m+n)x}{m+n}\right]_{-\pi}^{\pi} \\ &= 0 \end{aligned}$$

Since integral of all 5 forms $= 0$, then the collection is orthogonal on $[-\pi, \pi]$

3(b) $\alpha = 18\ mm^2/s = 18 \times 10^{-6}\ m^2/s = 1.8 \times 10^{-5}\ m^2/s$

$L = 2$

$f(x) = 10x$

$$T(x,t) = \frac{a_0}{2} + \sum_{n=1}^{\infty} a_n \cos\left(\frac{n\pi x}{L}\right) e^{-\alpha\left(\frac{n\pi}{L}\right)^2 t}$$

$$a_0 = \frac{2}{L}\int_0^L f(x)\,dx$$

$$= \frac{2}{2}\int_0^2 10x\,dx$$

$$= \left[5x^2\right]_0^2$$

$$= 20$$

$$a_n = \frac{2}{L}\int_0^L f(x)\cos\left(\frac{n\pi x}{L}\right)dx$$

$$= \frac{2}{2}\int_0^2 10x\cos\left(\frac{n\pi x}{2}\right)dx$$

$$= 10\left[\frac{2x}{n\pi}\sin\left(\frac{n\pi x}{2}\right) - \int \frac{2}{n\pi}\sin\left(\frac{n\pi x}{2}\right)dx\right]_0^2$$

$$= 10\left[\frac{2x}{n\pi}\sin\left(\frac{n\pi x}{2}\right) + \frac{4}{n^2\pi^2}\cos\left(\frac{n\pi x}{2}\right)\right]_0^2$$

$$= \frac{40\sin(n\pi)}{n\pi} + \frac{40\cos(n\pi)}{n^2\pi^2} - \frac{40}{n^2\pi^2}$$

$$T(x,t) = \frac{a_0}{2} + \sum_{n=1}^{\infty} a_n \cos\left(\frac{n\pi x}{L}\right) e^{-\alpha\left(\frac{n\pi}{L}\right)^2 t}$$

$$= 10 + \sum_{n=1}^{\infty}\left[\frac{40\sin(n\pi)}{n\pi} + \frac{40\cos(n\pi)}{n^2\pi^2} - \frac{40}{n^2\pi^2}\right] e^{-\alpha\left(\frac{n\pi}{2}\right)^2 t}$$

4(a)

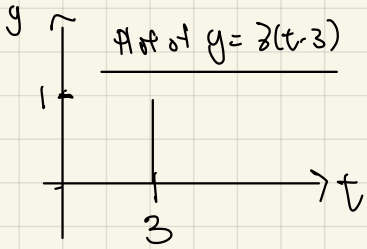

$\delta(t-3)$ represents a push at $t=3$ on damped mass-spring system.

$$y(0) = 0, \quad y'(0) = 0$$

$$y'' + 4y' + 3y = \delta(t-3)$$

$$L\{y'' + 4y' + 3y\} = L\{\delta(t-3)\}$$

$$s^2Y(s) + 4sY(s) + 3Y(s) = e^{-3s}$$

$$(s^2 + 4s + 3)Y(s) = e^{-3s}$$

$$Y(s) = \frac{e^{-3s}}{s^2+4s+3}$$

$$= \frac{e^{-3s}}{(s+1)(s+3)}$$

$$= \frac{e^{-3s}}{2}\left[\frac{1}{s+1} - \frac{1}{s+3}\right]$$

$$y(t) = L^{-1}\{Y(s)\}$$

$$= \frac{1}{2}L^{-1}\left\{e^{-3s}\left(\frac{1}{s+1} - \frac{1}{s+3}\right)\right\} \quad \text{via 2nd shift theorem}$$

$$= \frac{1}{2}u(t-3)\,f(t-3) \quad \text{where } f(t) = L^{-1}\left\{\frac{1}{s+1} - \frac{1}{s+3}\right\} = e^{-t} - e^{-3t}$$

$$= \frac{1}{2}u(t-3)\left[e^{-(t-3)} - e^{-3(t-3)}\right]$$

(b) determinant $= b^2 - 4ac$

$$= 4^2 - 4(1)(3)$$

$$= 4 > 0$$

The mass-spring system is over-damped. The displacement reaches its peak in response to the initial displacement, then returns slowly to its equilibrium position.